Video & Audio - Equipment

Zum mieten oder allenfalls kaufen – kontaktieren Sie uns

Inhalt

TRICASTER – TC1 (Videomixer + Control Surface + Dante Lizenz)

Technical Specifications

Video Input	16 x simultaneous external video inputs, supporting any combination of compatible sources in resolutions up to 4K UHD at frame rates up to 60fps (2160p 59.94)
Network Video Input	16 x IP video inputs via NDI®, resolution-independent, with support for key and fill
SDI Video Input[1]	4 x 3G/HD/SD-SDI connections supporting video input in any combination of standard formats, resolutions, and frame rates[2] • 1080p: 59.94, 50, 29.97, 25 • 1080i: 59.94, 50 • 720p: 59.94, 50, 29.97, 25 • 576i 50 • 480i 59.94 *[1]Optionally supports up to 16 simultaneous 3G/HD/SD-SDI video inputs or quad-link 3G-SDI video inputs (4K UHD) via network integration with applicable NewTek NC1 conversion modules* *[2]Available frame rates determined by session video standard (NTSC or PAL)*
PTZ	Support for up to 8 simultaneous Pan-Tilt-Zoom (PTZ) robotic cameras via serial and network protocols, including RS232, RS422 and IP, with integrated controls and preset system
Skype TX	Native support for up to 2 simultaneous Skype® video call inputs via Skype TX software integration, including tally and Talk Back communication
Video Output	Configurable for up to 4 independent video mix outputs, with simultaneous delivery via IP and SDI
Network Video Output	IP video output via NDI, optionally configurable for: • 4 x independent video mix outputs • 1 x 4K UHD video mix output
SDI Video Output	4 x 3G/HD/SD-SDI connections, optionally configurable for: • 4 x independent 3G/HD/SD video mix outputs • 1 x 4K UHD video mix output via 3G-SDI quad-link grouping
Stream Output	2 x resolution-independent streaming video outputs, independently configurable, with simultaneous stream archive

Multiviewer Output	3 x multiviewer outputs supporting standard display resolutions • 1 x DVI user interface with multiviewer • 1 x HDMI multiviewer • 1 x DisplayPort multiviewer
Mix/Effect Buses (M/E)	4 x M/E buses supporting video re-entry • 1 x Mix/Effect channel per bus with support for up to 4 sources • 4 x KEY layers per bus • 9 x memory slots per bus 1 x PREVIZ configuration and preview bus
DSK Channels	4 x DSK channels
Media	5 x media players • 2 x DDR • 2 x GFX • 1 x Sound 15 x media buffers • 10 x animation buffers • 5 x graphic buffers 30 x clip players (available for use as transitions or media depending on function)
Keyers	Integrated LiveMatte™ chroma and luma keying technology on all source channels and M/E buses • 16 x input keyers • 4 x media player keyers • 4 x M/E keyers • 1 x PREVIZ keyer • 15 x buffer keyers
COMPs	Integrated video composition engine on the switcher and each M/E bus to create, store, and apply layer configurations and DVE-style motion sequences • 16 x configurable COMP presets per bus
Virtual Sets	Integrated LiveSet™ technology with 30+ live virtual sets and box effects included
DataLink	Integrated DataLink™ technology enabling real-time, automated data input from internal and external sources, including webpages, spreadsheets, scoreboards, databases, RSS feeds, watch files, XML, CSV, ASCII and more
Macros	Record, store, edit and automate commands and user-configured operation sequences • Attach to control panel buttons, keyboard shortcuts, hotspots, MIDI and X-keys® buttons or GPI triggers • Attach to internal events and state changes, including audio, media playback, tally and specific switcher actions • Supports control via web-based interface

Recording	8 x configurable video recording channels via IsoCorder™ technology • 8 x NDI® recordings (scalable to higher number with Premium Access) • 4 x QuickTime® archival video recorders (SHQ2 quicktime codec, 4:2:2 encoding, 24-bit audio, with timecode)[3] • 2 x H.264 IsoCorder™ distribution video recorders (multiple profiles) • 1 x MP3 audio recorder *[3] QuickTime Player not required for playback in common NLE applications*
Storage	4TB internal media storage • 2 x 4TB 7200 RPM, 128MB Cache, SATA 6.0Gb/s, 3.5" Internal Hard Drive • Capacity varies by format, resolution and file specification • Supports recording to external storage via USB 3.0 and eSATA • Supports shared storage integration and third-party partner solutions
Grab	Grab full-resolution, deinterlaced still images from external video sources and outputs
Export	Export video and image files to social media, FTP, local or external volumes, and network servers, with optional transcoding
Audio Mixer	Integrated multi-channel audio mixer with support for quad-channel audio, DSPs and 4x4x4 audio input routing
Local Audio Input Dante™ Network Audio	4 x SDI embedded 1 x Balanced XLR stereo pair (Line) 3 x Balanced 1/4" stereo pairs (Line) Support for USB audio device input via compatible WDM audio drivers • Native support for network audio input and output via NDI • Embedded audio supported for all NDI input and output video signals • Integrated support[4] for Dante™ networking protocol from Audinate® • Support for AES67 protocol via compatible WDM audio drivers[5] *[4]Requires Dante Virtual Soundcard license from Audinate (sold separately)* *[5]Requires third-party virtual sound card license (sold separately)*
Supported Media File Formats	Import, store, and play back multimedia files, with optional transcoding, including: • Video: AVI, DV, DVCPro, DVCProHD, FLV, F4V, H.263, H.264, MOV, MKV, MJPEG, MPEG, MP4, WMV, WebM, and more • Image: PSD, PNG, TGA, BMP, JPEG, JPEG-XR, JPEG2000, EXR, RAW, TIF, WebP, and more • Audio: AIFF, MP3, WAV, and more
Monitoring	Support for up to 3 multiviewer displays with configurable workspaces and viewports
Signal Monitoring	Integrated waveform and vectorscope, full field rate with digital calibration, color preview and support for ITU-R Rec. 709
Processing	Video: Floating Point YCbCr +A 4:4:4:4 Audio: Floating Point, 96 kHz

Latency	Processing Latency: ~1.0-1.5 frames Practical Throughput Latency: 4 frames
A/V Standards	• 4K UHD video conforms to SMPTE 2036 (UHDTV1 using Square Division Quad Split) • 3G-SDI video conforms to SMPTE 424M (Level A) • HD-SDI video conforms to SMPTE 292M • SD video conforms to SMPTE 259M and ITU-R BT.656 • Analog audio levels conform to SMPTE RP-155
Tally	Support for hardware tally via HD15 GPI connector, network tally via NDI, and Blackmagic Design® SDI tally standard
Genlock	Genlock input supporting SD (Bi-level) or HD (Tri-level) reference signals
GPI	Supports GPI signals via JLCooper Electronics eBox GPI interface
MIDI	Support for standard MIDI protocol enabling third-party device control
System Drive	120GB SSD
NIC	• NIC 1 x 10 Gigabit Ethernet • 1 x 1 Gigabit Ethernet
System Physical	**TriCaster TC1** 2RU chassis with 400W PSU and multi-tiered hardware and software fail-safe • 19.0 x 3.5 x 19.57 in (48.3 x 8.9 x 49.7 cm) with rack ears attached **TriCaster TC1 (Redundant Power Option)** 3RU chassis with 500W redundant PSU and multi-tiered hardware and software fail-safe • 19.0 x 5.25 x 19.57 in (48.3 x 13.34 x 49.7 cm) with rack ears attached

NC-1 I/O Modul (8 Channel SDI//NDI Interface)

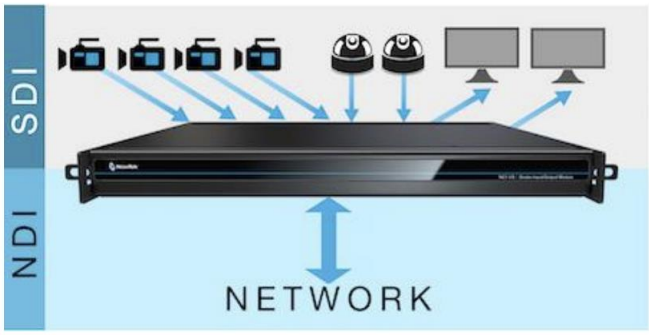

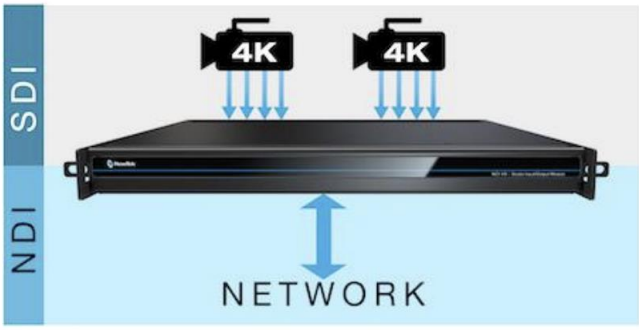

- 8 Additional SDI I/O Connections for TriCaster TC1
- 8x 3G/HD/SD SDI Hardware Inputs or Outputs
- 2x 4K UHD 60p Inputs or Outputs (via quad-link)
- 8 Connections. Use them as you wish.
- Redundant Power Supplies
- Native NDI Integration

Inspired Design

- Multi-channel SDI and IP video translation for delivery to compatible destinations and devices with near-zero latency
- Eight 3G/HD/SD SDI video connections via DIN 1.0/2.3, configurable for input, output, or a combination of both
- Support for any combination of compatible video formats in resolutions up to 4K UHD at frame rates up to 60fps
- Scalable, modular architecture supporting systematic expansion and strategic deployment

V-Mix Videomixer (V-Mix Pro @ HP Z820 + Blackmagic Decklink)

Connections

SDI Video Inputs
4 x bidirectional 12-bit SD/HD independently configurable as either Input or Output.

SDI Video Outputs
4 x bidirectional 12-bit SD/HD independently configurable as either Input or Output.

SDI Audio Inputs
16 channels embedded in SD and HD.

SDI Audio Outputs
16 channels embedded in SD and HD.

Sync Input
Tri-Sync or Black Burst.

Computer Interface
PCI Express 4 lane generation 2, compatible with 4, 8 and 16 lane PCI Express slots.

DeckLink Duo 2

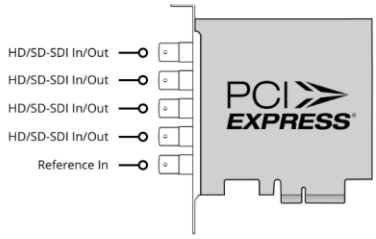

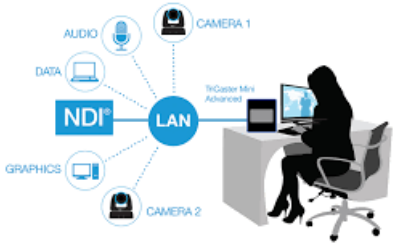

Audio Interface (24-Ch Digital Mixer/USB Multi-with Wireless Control)

Soundcraft Ui 24R

HARMAN Sound Quality and Reliability

dbx DigiTech lexicon STUDER

Features

- Renowned Soundcraft quality and performance
- Built-in dual-band Wi-Fi eliminates the need for a router to provides a reliable connection to up to 10 mobile devices in mission critical situations
- Control Ui24R from iOS, Android, Windows, Mac OS and Linux browsers without installing additional apps
- Record and mix with the warmth of 20 professional-quality Studer-designed preamps
- dbx compression and iconic Lexicon reverb and delay processing
- 2 channels of DigiTech guitar amp modeling
- Dual-path, redundant multi-track recording of all 24 inputs to USB drive and connected Mac/PC
- 24 simultaneous inputs (10 combo ¼" TRS/XLR, 10 XLR, 2 line level, 2 digital)
- 4-band parametric EQ, high-pass filter, compressor, de-esser, and noise gate on input channels
- 31-band graphic EQ, noise gate, compressor, and dbx® AFS2 Automatic Feedback Suppression on all outputs
- Real-time frequency analyzer (RTA) on inputs and outputs
- Compatible with Mac/PC DAWs and other music software
- Compatible with Harman Connected PA application and system for easier setup and control
- 4U rackmount design

SDI Kreuzschiene + Smart and Master Control Panel (40x40, 12G SDI)

Control Panel

Videohub Smart Control Pro

Videohub Master Control Pro

Connections

SDI Video Inputs
40 x 10-bit SD-SDI, HD-SDI and 12G-SDI.

Please click here for a summary of recommended cables to use with Blackmagic 12G-SDI products.

SDI Video Outputs
40 x 10-bit SD-SDI, HD-SDI and 12G-SDI.

SDI Rates
DVB-ASI, 270Mb, 1.5G, 3G, 6G, 12G.

Video Input Re-Sync
None.

SDI Reclocking
On all SDI outputs.

Reference Inputs
Tri-Sync or Black Burst.

Reference Outputs
Reference terminating loop output.

Control Panel Connection
Ethernet.

Serial Control Connection
DB-9 RS-422.

Multi Rate Support
Auto detection of SD, HD or 6G-SDI. Simultaneous routing of 4K, HD, SD video and DVB-ASI.

Updates
USB

Front Panel Router Control
40 buttons for local control of Videohub. 6 buttons and scroll wheel for control of LCD display or RJ45 Ethernet. RS-422.

Router Configuration
Via front panel LCD or RJ45 Ethernet.

RS-422 Router Control
1 x input for controlling router crosspoint switching.

SD Video Standards
525i59.94 NTSC, 625i50 PAL

HD Video Standards
720p50, 720p59.94, 720p60
1080p23.98, 1080p24, 1080p25, 1080p29.97, 1080p30, 1080p47.95, 1080p48, 1080p50, 1080p59.94, 1080p60
1080PsF23,98, 1080PsF24, 1080PsF25, 1080PsF29.97, 1080PsF30
1080i50, 1080i59.94, 1080i60

2K Video Standards
2Kp23.98 DCI, 2Kp24 DCI, 2Kp25 DCI, 2Kp29.97 DCI, 2Kp30 DCI, 2Kp47.95 DCI, 2Kp48 DCI, 2Kp50 DCI, 2Kp59.94 DCI, 2Kp60 DCI
2KPsF23.98 DCI, 2KPsF24 DCI, 2KPsF25 DCI, 2KPsF29.97 DCI, 2KPsF30 DCI

Ultra HD Video Standards
2160p23.98, 2160p24, 2160p25, 2160p29.97, 2160p30, 2160p47.95, 2160p48, 2160p50, 2160p59.94, 2160p60

4K Video Standards
4Kp23.98 DCI, 4Kp24 DCI, 4Kp25 DCI, 4Kp29.97 DCI, 4Kp30 DCI, 4Kp47.95 DCI, 4Kp48 DCI, 4Kp50 DCI, 4Kp59.94 DCI, 4Kp60 DCI

SDI Compliance
SMPTE 259M, SMPTE 292M, SMPTE 296M, SMPTE 372M, SMPTE 424M,
SMPTE 425M Level A and B
SMPTE 2081-1, SMPTE 2081-10, SMPTE 2082-10,
ITU-R BT.656 and ITU-R BT.601

SDI Video Sampling
4:2:2 and 4:4:4

SDI Audio Sampling
Television standard sample rate of 48kHz and 24-bit.

SDI Color Precision
10-bit 4:2:2 and 4:4:4

SDI Color Space
YUV or RGB

SDI Auto Switching
Automatically selects between SD-SDI, HD-SDI, 12G-SDI and DVB-ASI on each input so that each input can be running a different television standard.

SDI Metadata Support
Video payload identification ancillary data as per SMPTE 352M.

KiPro Rack (1 HE Recorder)

Video Formats	• 1080i 25, 29.97, 30 • 1080PsF 23.98, 24, 25*, 29.97* • 1080p 23.98, 24, 25, 29.97 • 720p 23.98*, 25*, 29.97*, 50, 59.94, 60 • 625i 25 • 525i 29.97 *25 and 29.97 require a valid camera source and the use of the Record Type>PsF selection
Codec Support	• Apple ProRes 422 • Apple ProRes 422 (HQ) • Apple ProRes 422 (LT) • Apple ProRes 422 (Proxy) • Avid DNxHD HQX (220x) • Avid DNxHD SQ (145) • Avid DNxHD LD (36), only provides support for the 1080p format
Removable Storage	• AJA KiStor modules - 2 slots with rollover recording
Video Input Digital	• SD/HD SDI, SMPTE-259/292, 10-bit • Single Link 4:2:2 (2 x BNC, input selection in software) • HDMI v1.3
Video Output Digital	• SD/HD SDI, SMPTE-259/292 • Single Link 4:2:2 10-bit (1 x BNC) • HDMI v1.3 Note: HDMI requires 1080i, 720p or 1080p to be active; HDMI does not provide support for PsF

Video Input Analog

- SD/HD Component (3 x BNC)
- SMPTE/EBU N10, Betacam 525 line, Betacam 525J
- 12-bit A/D, 2 x oversampling
- +/- .25dB to 5.5 mHz Y frequency response
- +/- .25dB to 2.5 mHz C frequency response
- .5% 2T pulse response
- <2 ns Y/C delay inequity, or Composite (1 x BNC – CVBS on Y)

Video Output Analog

- Component (3 x BNC)
- NTSC, NTSCJ, PAL
- HD: YPbPr, RGB
- SD: YPbPr, RGB (component mode)
- SMPTE/EBU N10, Betacam 525 line, Betacam 525J, RGB
- 12-bit D/A, 8 x oversampling
- +/- .2dB to 5.5 mHz Y frequency response
- +/- .2dB to 2.5 mHz C frequency response
- .5% 2T pulse response
- <1 ns Y/C delay inequity, or Composite (1 x BNC – CVBS on Y)
- +/- .2dB to 5.0 mHz Y frequency response
- +/- .2dB to 1 mHz C frequency response
- <1% Diff Phase
- <1% Diff Gain

Audio Input Digital

- 8-channel, 24-bit SMPTE-272/299 SDI embedded audio, 48 kHz sample rate, synchronous
- 8-channel, 24-bit HDMI embedded audio, 48 kHz sample rate, synchronous
- 8-channel, 24-bit AES/EBU audio, 48 kHz sample rate, synchronous or nonsynchronous, internal sample rate conversion (4 x BNC)

Audio Input Analog

- 2-channel, 24-bit A/D analog audio, 48 kHz sample rate, balanced (2 x XLR)
- +24 dBu full scale digital
- +/- 0.2 dB 20Hz to 20 kHz frequency response (Note: Line or Mic selection via CONFIG menu parameters)

Audio Output Digital

- 8-channel, 24-bit SMPTE-272/299 SDI embedded audio, 48 kHz sample rate, synchronous
- 8-channel, 24-bit HDMI embedded audio, 48 kHz sample rate, synchronous
- 8-channel, 24-bit AES/EBU audio, synchronous or nonsynchronous, internal sample rate conversion (4 x BNC)

Audio Output Analog

- 2-channel, 24-bit D/A analog audio, 48 kHz sample rate, balanced (2 x XLR)
- +24 dBu full scale digital (0dbFS)
- +/- 0.2 dB 20 Hz to 20 kHz frequency response
- Stereo unbalanced headphone (1 x 3.5mm mini jack)

Up-Conversion

- Hardware 10-bit
- Anamorphic: fullscreen
- Pillarbox 4:3: results in a 4:3 image in center of screen with black sidebars
- Zoom 14:9: results in a 4:3 image zoomed slightly to fill a 14:9 image with black side bars
- Zoom Letterbox: results in image zoomed to fill fullscreen
- Zoom Wide: results in a combination of zoom and horizontal stretch to fill a 16:9 screen; this setting can introduce a small aspect ratio change

Down-Conversion

- Hardware 10-bit
- Anamorphic: fullscreen
- Letterbox: image is reduced with black top and bottom added to image area with the aspect ratio preserved
- Crop: image is cropped to fit new screen size

Cross-Conversion

- Hardware 10-bit
- 1080i to 720p
- 720p to 1080i

KiPro (Portable Recorder + Bag)

Video

Video Inputs

Digital::
- SD and HD-SDI (1xBNC), SMPTE-259/292/296
- HDMI

Analog::
- SD/HD Component (3xBNCS):
- SMPTE/EBU N10, Betacam 525 line,
- Betacam 525J, YPbPr
- 12-bit A/D, 2x oversampling

Video Outputs (all simultaneously active)

Digital::
- SD and HD-SDI, SMPTE-259/292/296 (1xBNC)
- HDMI

Analog::
- Composite (1xBNC):
- NTSC, NTSCJ, PAL
- 12-bit D/A, 8x oversampling
- SD/HD Component (3xBNCs):
- SD: SMPTE/EBU N10, Betacam 525 line,
- Betacam 525J, RGB
- 12-bit D/A, 8x oversampling
- HD: YPbPr, RGB
- 12-bit D/A, 2x oversampling

Audio

Audio Inputs

Digital:
- 24-bit SDI embedded audio, 8 channel, 48kHz
- HDMI embedded, 2 channel

Analog:
- 24-bit A/D, 2 channel balanced (2 XLR), 48kHz
- Input level: Line, Mic, Mic + phantom 48Vdc
- 2 channel unbalanced (2 RCA)

Audio Outputs

Digital::
- 24-bit SDI embedded audio, 8 channel, 48kHz
- HDMI embedded, 8 channel

Analog::
- 24-bit D/A, 2 channel balanced XLR, 48kHz
- 2 channel unbalanced (2 RCA)

Hardware Conversion

Up-conversion - 10-bit

Anamorphic: Full-screen

Pillar box 4:3: Results in a 4:3 image in center of screen with black sidebars

Zoom 14:9: Results in a 4:3 image zoomed slightly to fill a 14:9 image with black side bars

Zoom Letterbox: Image zoomed to fill screen

Zoom Wide: Combination of zoom and horizontal stretch to fill 16:9 screen; this setting can introduce a small aspect ratio change

Down-conversion - 10-bit

Anamorphic: Full-screen

Letterbox: Image is reduced with black top and bottom added to image area with the aspect ratio preserved

Crop: Image is cropped to fit new screen size

Cross-conversion - 10-bit 1080i to 720P

720P to 1080i

Clock & Timing (Display + Clock + 1 HE Control + Unit Ethernet to LTC Generator)

Alpermann + Velte TCU MTD System, Controller, Clock Display UD300 und Display UD56E-PoE

Ethernet to LTC Converter ETC

POE+ Switch (Netgear PoE+ Switch AV Line M4250-10G2F-PoE+ 12 Port + Single Mode SFP)

M4250-10G2F-PoE+
AV Line Managed Switch

Ordering information

- Americas: GSM4212P-100NAS
- Europe: GSM4212P-100EUS
- Asia Pacific: GSM4212P-100AJS
- China: GSM4212P-100PRS
- Warranty: Lifetime ProSAFE Hardware Warranty
- AVB License: AVB4212P-10000S (sold separate)

Ordering information (AVB-ready version)

- Americas: GSM4212P-111NAS
- Europe: GSM4212P-111EUS
- Asia Pacific: GSM4212P-111AJS
- China: GSM4212P-111PRS
- AVB License already installed in the switch
- AVB Profile already configured on all ports

- 8-port 10/100/1000BASE-T (RJ45) PoE+ with 125W PoE budget
- 2-port 10/100/1000BASE-T (RJ45)
- 2-port 1000BASE-X (SFP)
- 24 Gbps non-blocking fabric across 12 ports
- Out-of-band 1G Ethernet management port
- USB-C and RJ45 RS232 console ports and USB-A storage port
- Front black display panel and all ports in the back
- Possible reversed mounting with ports in the front
- Rack-mounting standard brackets
- Longer brackets for recessed mounting (2 inches / 5 cm)
- Threaded hole in front (1xM10) for clamps
- Threaded holes on the bottom (4xM5) for 50x100mm VESA plates
- Selectable fan modes for fanless, quiet, or cool operation
- Dimensions (WxDxH): 440 x 200 x 43.2 mm
- Weight: 2.85Kg (6.28lb)

POE+ Switch (Netgear 8-Port Gigabit Ethernet POE+ Smart Managed Pro + Single Mode SFP)

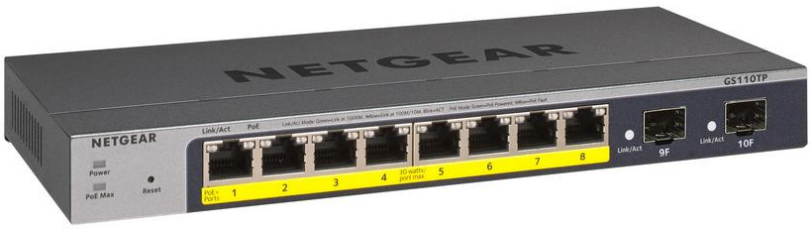

Datenübertragungsrate: 1.000 Mbit/s
Reichweite: 10 km
Anschlüsse: LC
LWL-Standard: Single-Mode
Wellenlänge: 1.310 nm

Messgerät/Waveform (Imagine TVM 9150 PKG + Audio Option TVM-A3-OPT 2-F)

TVM9150PKG - Details

- **Features:**
  - Dual, auto-detecting SDI input for 3 Gb/s, HD or SD
  - Dual, auto-detecting NTSC/PAL analog composite option
  - Single-input ASI monitoring option
  - 3D analysis upgrade with multiple 3D formats and displays
  - Standards: SMPTE 424M, SMPTE 292M, SMPTE 259M-C, NTSC/PAL
  - Multiple reference inputs
  - Simultaneous display of up to four different inputs
  - Customizable display functions, including screen location and multiple displays
  - Patented video relative timing display
  - Patented gamut display
  - Ancillary data processing (including AFD, WSS, SourceID, VITC, LTC, and ANC TC)
  - Pixel locator/data word analyzer
  - Multiple-picture thumbnail
  - A/B parade and overlay
  - 608, 708 closed-caption detect, alarm, display
  - Teletext and OP-47 detect, alarm, display
  - Comprehensive alarm set with peak level report
  - 16 direct-access user presets
  - Integral high-brightness XGA TFT color LCD display
  - Illuminated controls and indicators
  - DVI-I output
  - USB port for control and data transfer
  - 10/100Base-T Ethernet, SNMP agent
  - Web server
  - SpyderWeb II remote control and logging software
  - GPI control

Abhören (Sonifex Reference Monitor, HD-SDI Emb Option & 4 Stereoeingänge)

Technische Daten RM-2S4

Eingänge

Audio-Eingänge	4 analoge oder digitale (AES/EBU) Stereoeingänge mit automatischer Formaterkennung
Maximaler Eingangspegel:	+18dBu
Gleichtaktunterdrückung:	>60dB typisch
Eingangsimpedanz:	20kΩ (analog) 110Ω (digital mit schaltbarer Terminierung)
AES/EBU Abtastraten:	32 bis 192kHz, intern auf 48kHz gewandelt
Eingangspegel:	0, +6, +12 oder +18dB Digital-Pegel (schaltbar)
Auswahl:	2 x Drehgeber mit LED-Statusanzeigen

Line-Pegelausgänge

Audio-Ausgänge:	1 x analog oder digital (AES/EBU) Stereoausgang (umschaltbar)
Ausgangspegel:	Unity-Gain oder dem Lautstärkeregler folgend (umschaltbar)
Maximaler Ausgangspegel:	+18dBu
Ausgangsimpedanz:	<50Ω (analog) 110Ω (digital)
AES/EBU Abtastrate:	48kHz
Verzerrung:	<0.02% (1kHz, +8dBu Ausgang)
Rauschen:	-84dB RMS, Unity-Gain Bezug +8dBu Ausgang
Frequenzgang:	20Hz-20kHz +0/-0.5dB
Übersprechen 1kHz Eingang: 10kHz Eingang:	Analoge Ein- & Ausgänge, Bezug 0dBu <-90dB <-85dB

Verstärker/Lautsprecher

Konfiguration:	3-Weg-System mit Stereo Hoch-/Mitteltöner und Mono-Tieftöner
Ausgangsleistung:	2 x 5W (Hoch-/Mitteltöner) + 20W (Tieftöner) mit Schutzlimiter
Übergangsfrequenz:	500Hz (3. Ordnung Butterworth)
Verzerrungen (Hoch-/Mitteltöner):	< 0.05% (1kHz, 3W Ausgangsleistung)
Verzerrungen (Tieftöner):	< 0.05% (100Hz, 6W Ausgangsleistung)
Rauschen:	Mehr als 80dB unterhalb vollem Ausgangspegel
Lautstärke:	Stummschaltung bis Maximum via Drehgeber
Balanceregelung:	±6dB via Drehgeber
Maximaler Ausgangspegel:	102dB SPL @ 2ft

Pegelinstrumente

Anzahl:	2 x 53-Segmente, dreifarbige LED-Anzeige
Charakteristik:	Umschaltbar zwischen: 1. Dual BBC PPM + standard VU 2. BBC PPM 3. EBU PPM 4. Nordic PPM 5. AES/EBU digital PPM 6. DIN PPM 7. Standard VU 8. Extended VU
Ballistik:	Je nach gewählter Charakteristik
Anstiegszeit:	Je nach gewählter Charakteristik

Phasenmeter

Typ:	5-Segmente, Anzeige für 0, 45, 90, 135 und 180 Grad Phasenbezug

Technische Daten RM-HD1

SDI Spezifikationen

Eingangsimpedanz:	75Ω
Ausgangsimpedanz:	75Ω
Ausgangspegel:	0.8 V Spitze-Spitze
Verlust:	> 15 dB (1.5 GHz)
Jitter:	< 0.2UI
Unterstützte SDI-Standards:	270Mbps, SMPTE-259M-C (SD) 1.485 oder 1.4835Gbps, SMPTE-292M (HD) 2.97 oder 2.967Gbps, SMPTE-424M (3G)
Unterstützte Videoformate:	525/59.94 (SMPTE-125M) 625/50 (ITU-R BT.656) 720p/23.98, 24, 25, 29.97, 30, 50, 59.94, 60 (SMPTE-296M) 1035i/59.94, 60 (SMPTE-260M) 1080i/50, 59.94, 60 (SMPTE-274M) 1080p/23.98, 24, 25, 50, 59.94, 60 (SMPTE-274M) 1080pSF/23.98, 24, 25, 29.97, 30 (RP-211) 1080i/50 (SMPTE-295M) 1080p/50 (SMPTE-295M)
Embedded Audio-Standards:	SMPTE 272M oder SMPTE 299M 24 bit 48 kHz Synchron/Asynchron* *Audio muss synchron sein bei SD. Asynchrone Audiosignale in HD-Datenströmen können nur eine Audio-Gruppe verarbeiten.

Anschlüsse

HD-SDI-Eingang:	1 x BNC 75Ω SDI-Eingang
HD-SDI-Ausgang:	1 x BNC 75Ω SDI-Ausgang (durchgeschleift, aber neu getaktet)

Prompter (Autoscript EPIC-IP19XL 19" PROMPTER + 24" TALENTSCREEN)

Autoscript **EPIC-IP19XL** - EPIC-IP on-camera package
Large 19" prompt and 24" talent monitor solution; Integrated full HD talent monitor; Prompt Monitor connects via network to WinPlus-IP prompting software; Folding hood; Prompt monitor size: 19"; Talent monitor size: 24"; Weight: 8.6 kg / 19.0 lb; Complete on-camera system weight: 16.4 kg / 36.2 lb

Autoscript **MT-EVOLVE** - Legacy hardware backplate adaptor
Allows mounting of all EVO and EPIC-IP monitors to existing Autoscript on-camera mounting and hoods.

- **Prompt monitor size: 19"**
- **Integrated talent monitor size: 24"**
- Integrated monitors only weight: 6.9 kg / 15.2 lb
- On-camera package weight: 14.7 kg / 32.4 lb
- **Prompt monitor aspect ratio: 4.3**
- Prompt monitor brightness: 1500 nits
- **Prompt monitor resolution: 1280 x 1024 SXGA**
- Prompt monitor contrast: 1000:1
- Prompt monitor dimensions: 467 x 399 x 41mm / 18.4 x 15.7 x 1.6"
- **Talent monitor aspect ratio: 16:9**
- Talent monitor brightness: 350 nits
- **Talent monitor resolution: 1920 x 1080**
- Script and feedback inputs: LAN, 2x HD-SDI, 2x CVBS
- Tally input: Opto sensor
- Timecode Inputs: LTC, NTP (VITC, D-VITC optional)
- Power consumption: 51W
- Power input: 4-pin XLR, 12-16.8VDC
- Outputs: Repeat Tally Output inc. 12V DC out
- Viewing angle: H/V 170°/160°
- Mounting: On-camera system with Intelligent Prompting backplate, carbon fibre hood and glass, rail and mounting bracket
- Certifications: CE, FCC, BIS

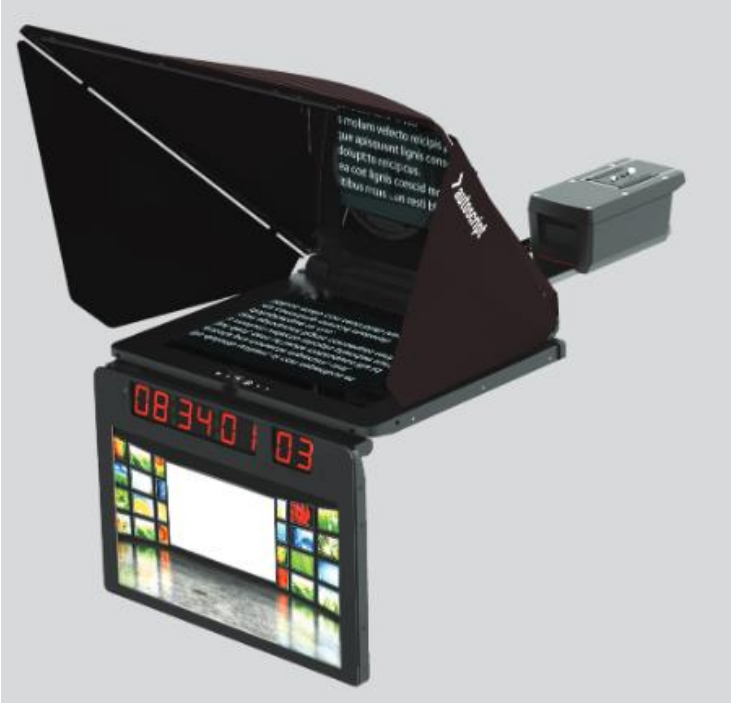

Funkmikrofon (SET Sennheiser EM 3732-II, SK 5212-II, SKM 5200-II)

Komplettes Sennheiser SET - **Frequenz 614 - 798 MHz**

2x Sennheiser **EM 3732-II HF Empfänger** (Dual)
3x Sennheiser **SK5212-II Taschensender** (ME 102-Kugelcharakteristik)
1x Sennheiser **SKM 5200-II Funkmikrofon** (ME5009 – Kondensator / breite Niere)
TOTAL 4x Funkstrecken

Hohe Übertragungssicherheit, hervorragende Audioqualität und einfache Bedienung, das sind die Kennzeichen der Gerätefamilie EM 3731/3732-II. Die gegenüber den Vorgängermodellen mehr als verdoppelte Schaltbandbreite von bis zu 184 MHz sowie eine Vielzahl von Anschlussmöglichkeiten garantieren maximale Flexibilität im täglichen Einsatz. So lassen sich die Empfänger dank des integrierten Ethernet-Anschlusses in jedes Netzwerk einbinden. Der digitale Audioausgang nach AES3/EBU-Standard erlaubt eine direkte Verbindung mit digitalen Mischpulten. Mithilfe der Sennheiser "Wireless Systems Manager"-Software (WSM) können alle Betriebszustände der Empfänger fernüberwacht und -gesteuert werden. Mit WSM ist es jetzt auch möglich, die Kanalzuordnung jederzeit neu festzulegen und als Szene abzuspeichern. Ein neues sinnvolles WSM-Feature für den Multikanalbetrieb: Auf Knopfdruck kann der dem jeweiligen Empfänger zugeordnete Kanal sofort identifiziert werden. Ein kontrastreiches Display und intuitive Bedienerführung, machen die Ausstattung dieser Spitzenempfänger komplett

AUSSCHREIBUNGSTEXT

Leistungsmerkmale
True-Diversity-Doppelempfänger;
Integrierter Antennensplitter 2 x 1 : 2;
Scan-Funktion;
6 voreingestellte Kanalbänke mit bis zu 59 voreingestellten Kanälen;
1 Kanalbank mit bis zu 60 frei in 5-kHz-Schritten durchstimmbaren Kanälen;
OLED-Display;
DSP-basierter HiDyn plus / HDX-Kompander;
Digitaler Audioausgang AES3;
Externe Wordclock-Synchronisation des digitalen Ausganges;
Audioausgangspegel einstellbar in 1 dB-Schritten;
Trafosymmetrische Audioausgänge;
Fernsteuerung und Fernüberwachung über Wireless System Manager-Software;
Infrarotschnittstelle zur schnellen Frequenzprogrammierung von dazugehörigen Sendern;
Lieferumfang inklusive 2 Teleskopantennen, Netzkabel und 19" Montagesatz;

TECHNISCHE DATEN

HF-Frequenzbereich	776 - 960 MHz	504075
	504078	
	504081	
	470 - 638 MHz	504076
	504079	
	504073	
	614 - 798 MHz	504077
	504080	
	504074	
	L: 470 - 638 MHz,	
	N: 614 - 798 MHz,	
	P: 776 - 960 MHz	
Abmessungen	436 x 44 x 250 mm	
Kompandersystem	Sennheiser HiDynplus auf DSP emuliert, Latenz <= 1,9 ms	
Audio-Anschluß	analogue: XLR-3, digital AES3: XLR-3	
Sample Rates:	44.1, 48, 88.2, 96 kHz, 24 Bit	
Klirrfaktor bei 1KHz	≤ 0,3 %	
Gewicht	ca. 4080 g	
Leistungsaufnahme	max. 50VA, 20 W (AC)	
Temperaturbereich (Lagerung)	-25 °C ... +70 °C	
Temperaturbereich (Betrieb)	-10 °C ... +55 °C	
Geräuschpegelabstand	≥ 118 dB(A) (analogue AF OUT), 140 dB (AES3 audio out)	
Schaltbandbreite	bis zu 184 MHz	
Spitzenhub	+-56 kHz	
Nennhub	+-40 kHz	

Technische Daten
Empfängertyp: True-Diversity-Doppelempfänger;
Empfangsfrequenzen: durchstimmbar in 5-kHz Schritten;
Anzahl der Speicherplätze: 6 Kanalbänke fest voreingestellt 1 Kanalbank in 5-kHz-Schritten frei durchstimmbar;
Frequenzbereiche: 470-638 MHz (L); 614-798 MHz (N); 776-960 MHz (P);
Schaltbandbreite: bis zu 184 MHz;
Modulationsart: Breitband FM;
Nennhub / Spitzenhub:
± 40 kHz / ± 56 kHz;
HF-Rauschsperre: 15 Stufen (0-30 µV)
Frequenzstabilität: ± 10 ppm (-10-55°C);
Rauschunterdrückungssystem: HiDyn plus und HDX auf DSP-Basis;
Latenzzeit: ≤ 1,3 ms
NF-Übertragungsbereich:
40 - 20.000 Hz (-3 dB);
Signal-/Rauschabstand
(1 mV, Spitzenhub: 115 dB (A) AF-out.;
Klirrfaktor (1 kHz): 0,3 % (typ. 0,15 %);
HF-Eingang: 2 BNC- Buchsen, 50 Ohm;
NF-Ausgang, trafosymmetrisch XLR:
AES-EBU: XLR-3; 44,1 kHz; 48 kHz; 88,2 kHz und 96 kHz; 24 Bit; Fernsteuerung mittels Wordclock möglich;
Ausgangsimpedanz- Wordclock: 75 Ohm;
Kopfhörerausgang: max. 12 dBu, regelbar;
Computerschnittstelle: Ethernet RJ 45;
Display: OLED-Display
Stromversorgung: 115 / 230 V AC, 11,3 – 18 V DC / 0,8 A;
Gehäuse: 19", 1 HE;
Abmessung: 436 x 43 x 230 mm;
In Übereinstimmung mit: ETS 300 422 und 300 445;
Fabrikat: Sennheiser / EM 3732-II-L

Fortsetzung TECHNISCHE DATEN

Stromversorgung	100 - 240 V AC, 50/60 Hz
Booster:	12 V DC, 2 x 200 mA, kurzschlussfest
Rauschsperre (Squelch-Einsatz)	13 Schritte (0 ... 30 µV)
Intermodulationsabstand	>= 80 dB
Antennenanschluß	2 BNC-Buchsen (50 Ω)
Kaskadierbar	2 BNC Buchsen (50 Ω)
Verstärkung	0 dB ±0,5 dB (bezogen auf Antenneneingänge)
Ausgangsspannung	+18 dBu bis –10 dBu einstellbar in 1-dB-Schritten (trafosymmetrisch)
Nachbarkanalunterdrückung	typ. 75 dB / +-400 kHz, typ. 80 dB / +-800 kHz
Empfangsfrequenzen	6 Kanalbänke mit jeweils bis zu 59 voreingestellten Kanälen 1 Kanalbank mit bis zu 60 frei in 5-kHz-Schritten durchstimmbaren Kanälen

IN EAR (SET Sennheiser SR 2050 IEM und SR 2000 IEM, 3x EK 2000 IEM-BW)

Frequenz: 516-558 MHz

Robustes 19" Ganzmetallgehäuse mit integriertem Schaltnetzteil
Bis zu 3000 Frequenzen in bis zu 75 MHz Schaltbandbreite
20 Festfrequenzbänke mit bis zu 32 kompatiblen Presets
6 Bänke mit je bis zu 32 frei durchstimmbaren Kanälen
Frequenzeinstellung in 25-kHz-Schritten
Umschaltbare Sendeleistung für flexiblen Einsatz
Erweiterter Audio-Frequenzgang im Bassbereich
Integrierter 5-Band Graphik-Equalizer
Konfiguration von Empfängern im Menü des Senders möglich
Synchronisation mit Empfänger über Infrarot Schnittstelle möglich
Universell einsetzbar durch umfangreiches Zubehörangebot
Überwachung und Steuerung durch Sennheiser WSM PC-Software
Bedienungsfreundliche Menüsteuerung über zweifarbig hinterleuchtetes Grafikdisplay (Rot als Warnhinweis)
Pilottonübertragung für störungsfreien Betrieb
Regelbare Kopfhörer-Anschlüsse

Technische Daten

SR 2000 IEM, SR 2050 IEM

Hochfrequenzeigenschaften

Frequenzbereiche	Aw:	516 – 558 MHz	Dw:	790 – 865 MHz
	Aw+:	470 – 558 MHz	Gw:	558 – 626 MHz
	Bw:	626 – 698 MHz	Gw1:	558 – 608 MHz
	Cw:	718 – 790 MHz	GBw:	606 – 678 MHz
Empfangsfrequenzen	bis zu 3000 Empfangsfrequenzen, abstimmbar in 25-kHz-Schritten			
	20 Kanalbänke mit jeweils bis zu 32 voreingestellten Kanälen			
	6 Kanalbänke mit 32 frei durchstimmbaren Kanälen, abstimmbar in 25-kHz-Schritten			
Schaltbandbreite	bis zu 75 MHz			
Frequenzstabilität	±10 ppm (–10 °C bis +55 °C)			
Antennenausgang	BNC-Buchse, 50 Ω			
HF-Ausgangsleistung an 50 Ω	typ. 10/30/50 mW (Low/Standard/High), umschaltbar			

Niederfrequenzeigenschaften

Modulationsart	FM-Breitband-Stereo (MPX-Pilottonverfahren)
Kompandersystem	Sennheiser HDX
Nennhub/Spitzenhub	±24 kHz / ±48 kHz
MPX-Pilotton (Frequenz/Hub)	19 kHz / ±5 kHz
NF-Übertragungsbereich	25 – 15000 Hz
NF-Eingang BAL AF IN L (I)/ BAL AF IN R (II)	2 x XLR-3/6,3-mm-Klinke-Kombibuchse, elektronisch symmetriert
Max. Eingangspegel	+22 dBu
Klirrfaktor (bei 1 kHz und Nennhub)	< 0,9 %
Geräuschspannungsabstand bei Nennlast und Spitzenhub	> 90 dB
NF-Ausgang LOOP OUT BAL L (I)/LOOP OUT BAL R (II)	⌀ 6,35-mm-Stereo-Klinkenbuchse, symmetrisch

Gesamtgerät

	SR 2000	SR 2050
Temperaturbereich	–10 °C bis +55 °C	
Spannungsversorgung	100 – 240 V ~	
Stromaufnahme	0,1 A	0,2 A
Abmessungen	ca. 217 x 483 x 43 mm	
Gewicht (inkl. Batterien)	ca. 2500 g	ca. 2700 g

LYNX Frame und Wandler (LYNX 5000 Frame + Yellobrick)

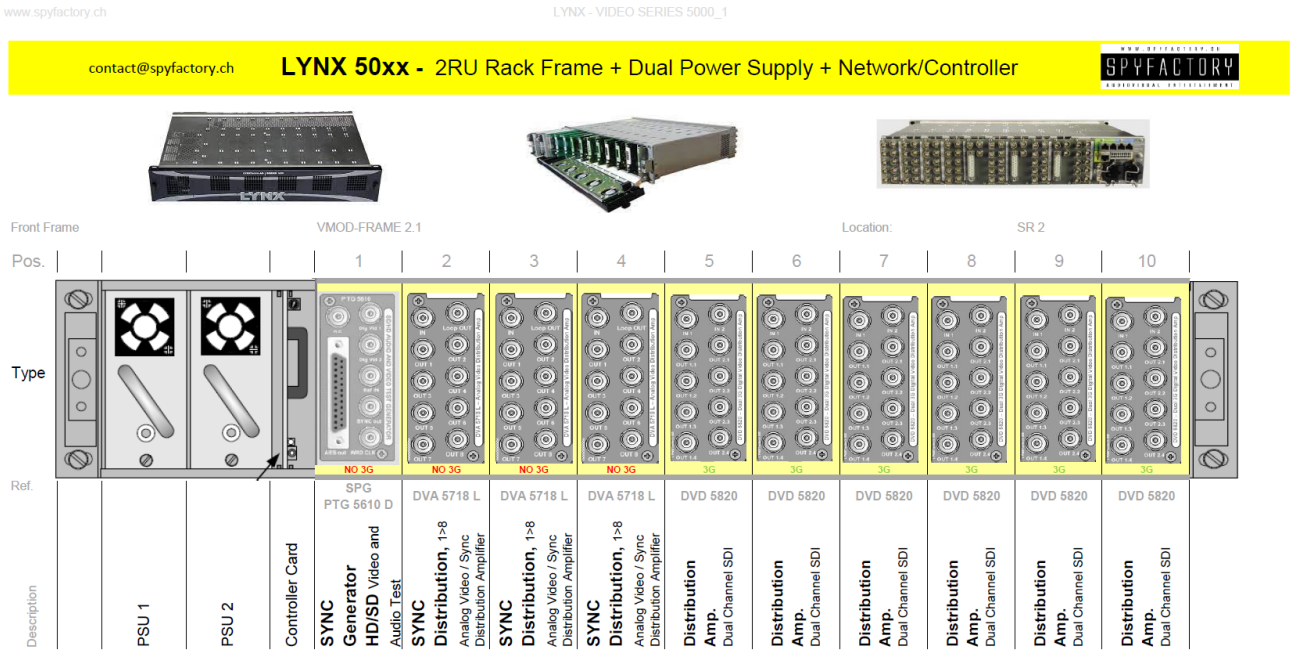

Lynx SPG PTG 5610D, DVA 5718, DVD 5820

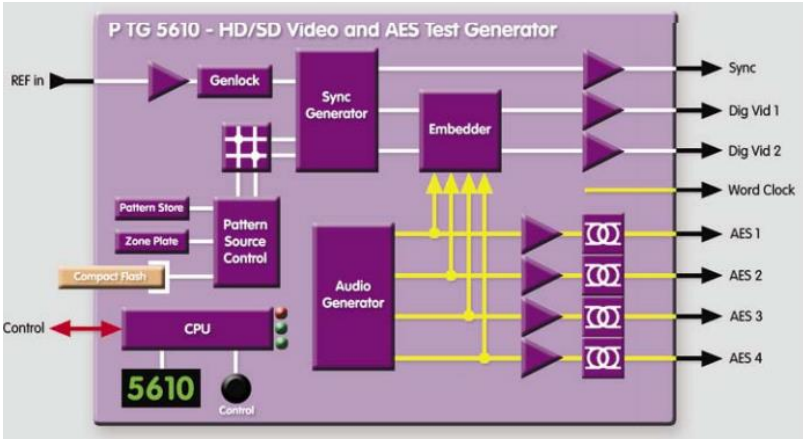

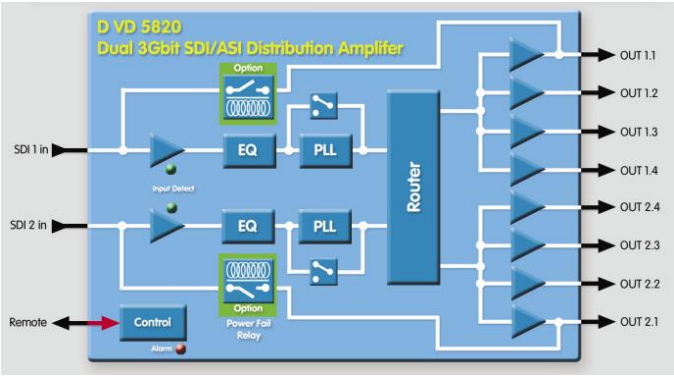

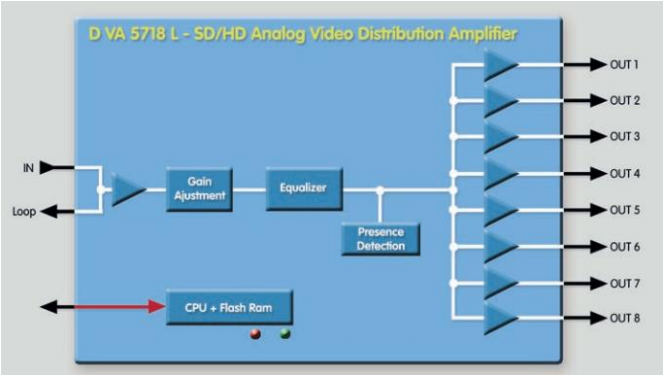

contact@spyfactory.ch **LYNX 50xx -** 2RU Rack Frame + Dual Power Supply + Network/Controller

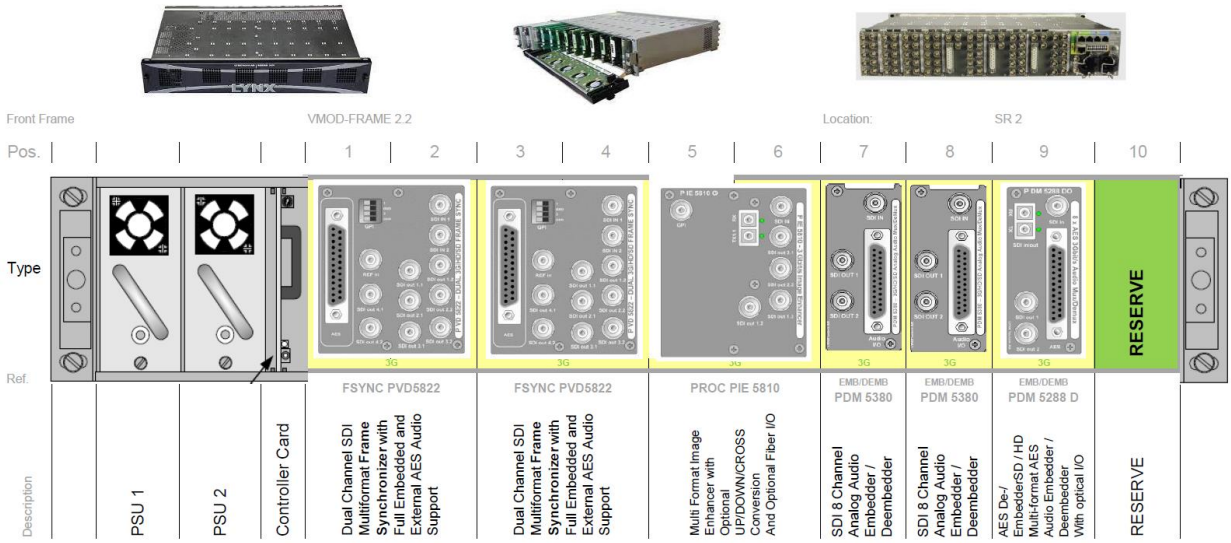

Lynx FSYNC PVD5822, PROC PIE 5810, PDM 5380, PDM 5288

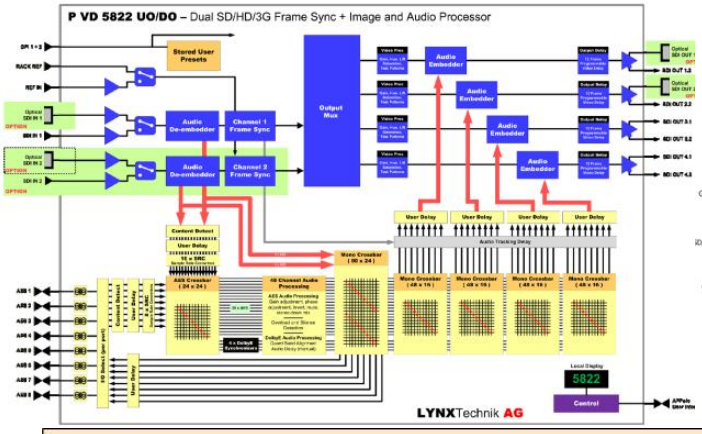

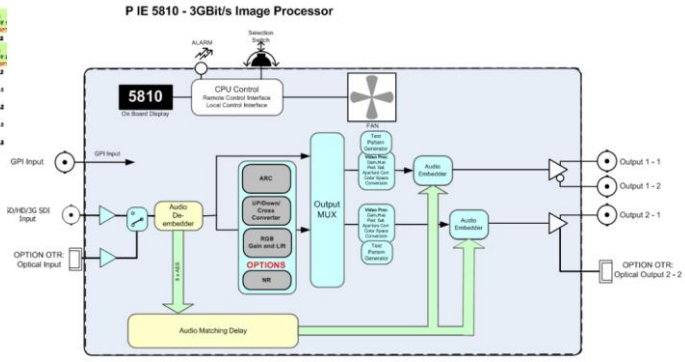

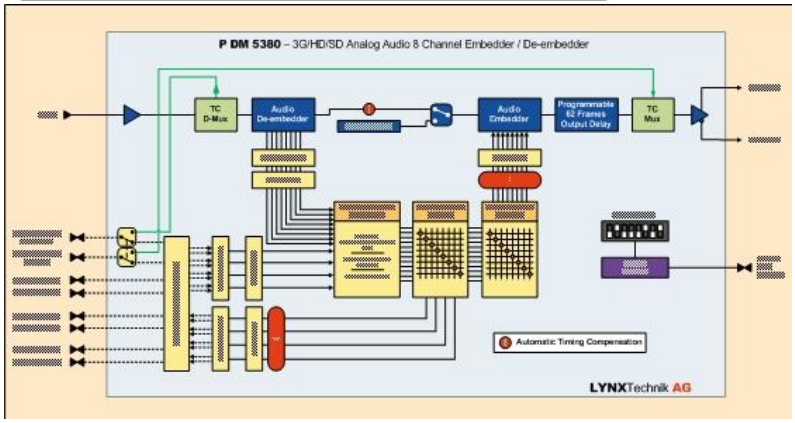

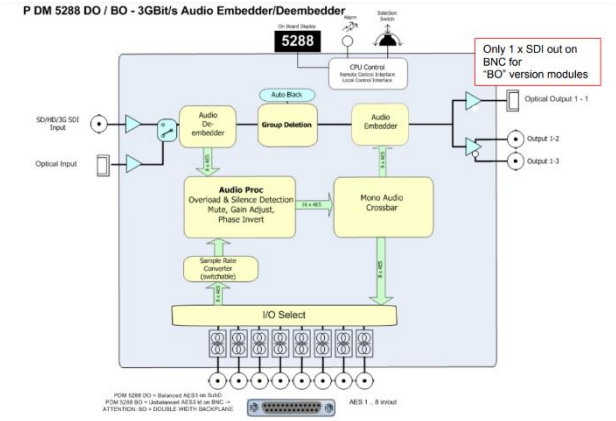

contact@spyfactory.ch **LYNX 50xx -** 2RU Rack Frame + Dual Power Supply + Network/Controller



Front Frame VMOD-FRAME 2.1 Location: SR 2

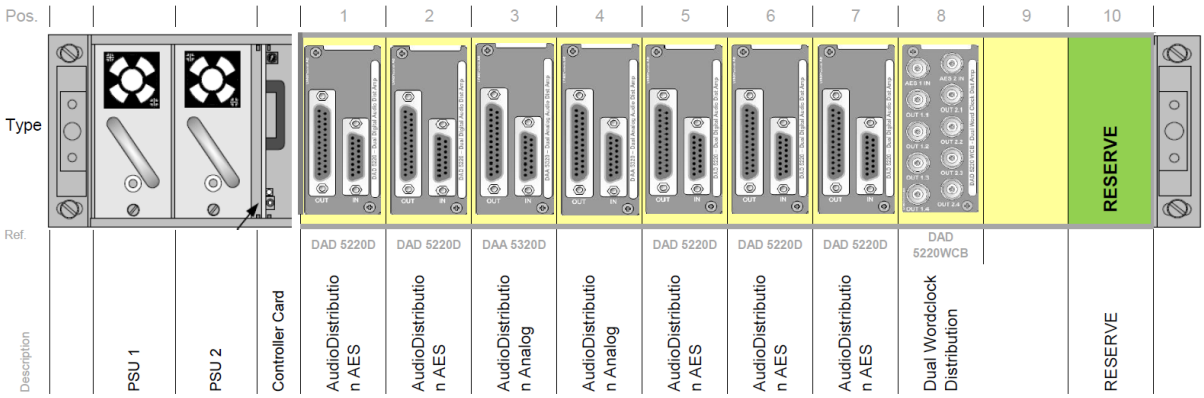

Lynx FSYNC DAD 5220D, DAA5320D, DAD 5220WCB

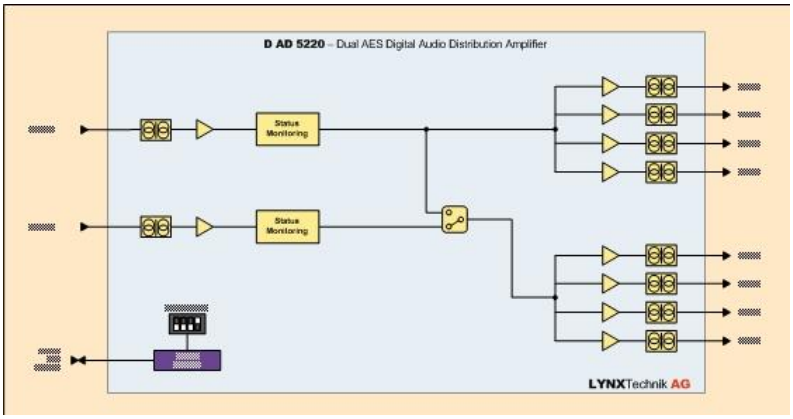

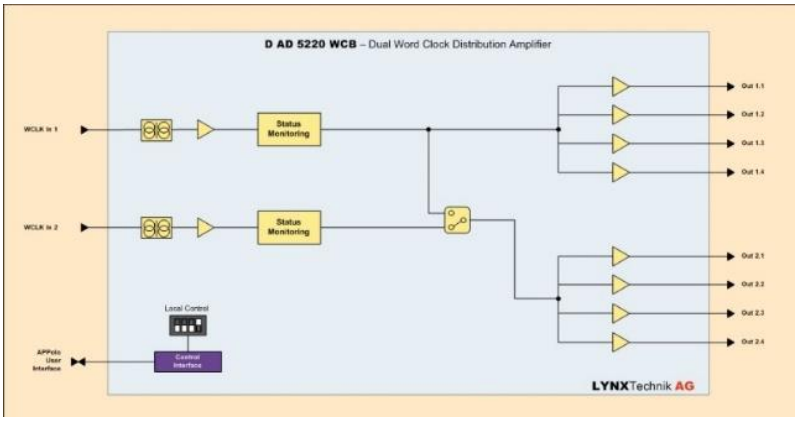

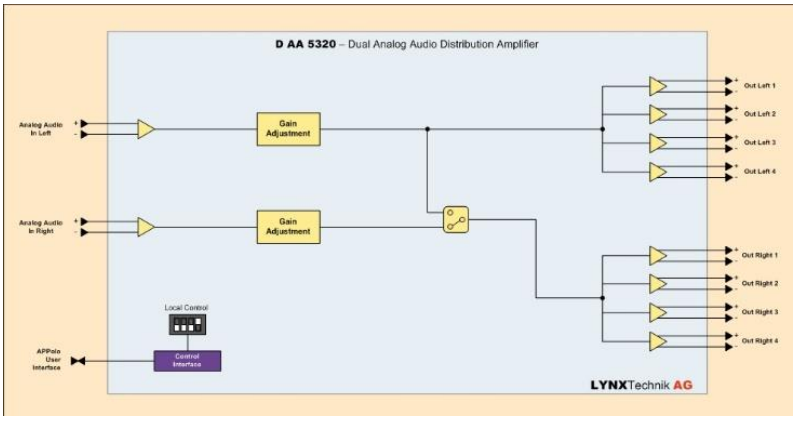

LYNX 50xx - LYNX - Yellobrik - RFR 1000-1 rack mount

Front Frame VMOD-FRAME 2.4 Location:

Pos.	1	2	3	4	5	6	7	8	9	10	11	12	13	14
Type	CDH 1811	CDH 1811	CDH 1811	CDH 1811	CDH 1811	CDH 1811		DVD 1823	CDH 1811	CDH 1811	CDH 1813	CDH 1813	CHD 1812	CHD 1813
	FIBRE CONV 1	FIBRE CONV 2	FIBRE CONV 3	FIBRE CONV 4	FIBRE CONV 5	FIBRE CONV 6	RES	DVD	FIBRE CONV 7	FIBRE CONV 8	FIBRE CONV 21	FIBRE CONV 22	CHD	CHD
Description	3Gbit SDI to HDMI Converter	3Gbit SDI to HDMI Converter	3Gbit SDI to HDMI Converter	3Gbit SDI to HDMI Converter	3Gbit SDI to HDMI Converter	3Gbit SDI to HDMI Converter	RESERVE	3G-SDI Reclocking Distribution Amplifier (Dual 1:3)	3Gbit SDI to HDMI Converter	3Gbit SDI to HDMI Converter	3Gbit SDI to HDMI Converter + 3D	3Gbit SDI to HDMI Converter + 3D	3Gbit to SDI Converter + Frame Synchronizer	3Gbit SDI to HDMI Converter + 3D Support

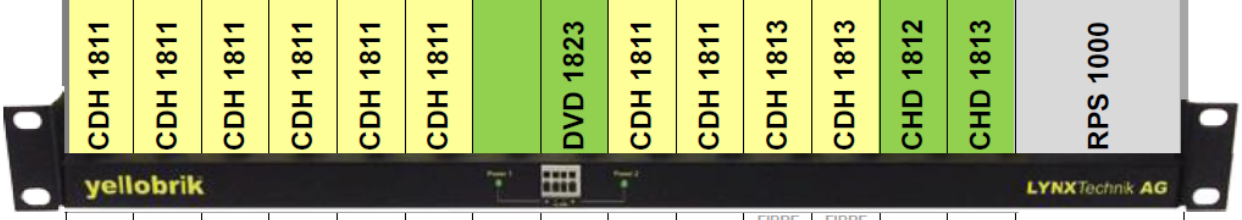

PSU
Power Supply

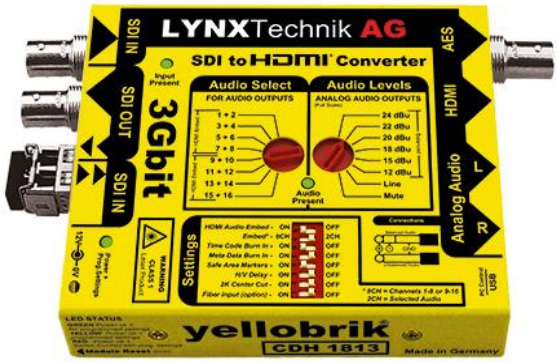

Diverse Tools + Wandler, Quad Splitter, USB Capture

Shogun 7 - The essential 7” workhorse that enables you to monitor-record-switch and live stream all from one device. 4x ISO + Program recording

Audio Sync Tool

AJA U-TAP SDI to USB Capture

MAGEWELL SDI Plus to USB Capture, SD/HD/3G/ 2K SDI + embedded audio, Loop-through SD/HD/3G/2K SDI, Audio input via Line in, Extract SDI embedded audio and output via Line out

NewTek Spark Plus NDI // 3G SDI und HDMI

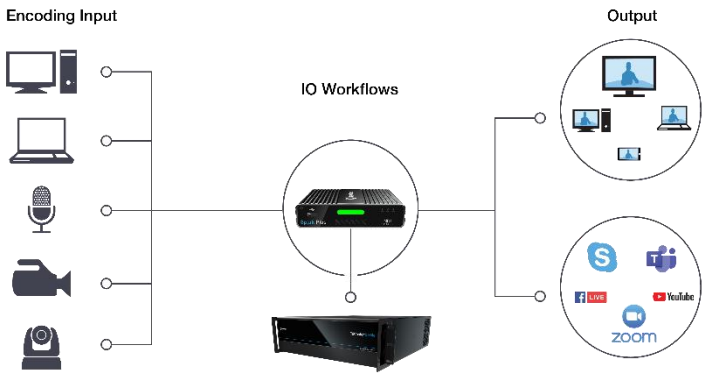

	Spark Plus IO 4K	Spark Plus IO 3G-SDI
Video Input	1 x HDMI	1 x 3G/HD/SD-SDI
Video Output	1 x HDMI	1 x 3G/HD/SD-SDI
Audio Input	3.5mm Mono Mic Level Embedded HDMI	3.5mm Line Level Embedded 3G-SDI
Audio Output	3.5mm Line Level Embedded HDMI	3.5mm Line Level Embedded 3G-SDI
Audio Channels	4 Encode 2 Decode	16 Encode 8 Decode
Encoding/ Decoding	NDI®	NDI®

3G:SMPTE 424M@2.97 and 2.967Gb/s
- 1080p@60/59.94/50Hz

HD:SMPTE 292M/274M/296M@1.485 and 1.435Gb/s
- 1080i@60/59.94/50Hz
- 1080p/psf@30/29.97/25/24/23.98Hz
- 720p@60/59.94/50/30/29.97/25/24/23.98Hz

SD:SMPTE 259M@270Mb/s
- 625i50
- 525i59.94

Decimater MD-QUAD (3G/HD/SD)-SDI QUAD SPLIT with (3G/HD/SD)-SDI and HDMI Outputs

Decimater MD-HX HDMI / SDI CROSS CONVERTER with Scaling and Frame Rate Conversion

Decimator MD-LX HDMI/SDI Bidirectional Converter

Decimator (3G/HD/SD)-SDI to both HDMI and NTSC/PAL with simultaneous scaling on both outputs and De-embedded Analogue Audio

Blackmagic MultiView 4 (6G/3G/HD/SD)-SDI to HDMI

many more…

Studio Monitor JVC DT-V24G1Z (24” 3G HDSDI Monitor)

VÉRITÉ

ProVérité

Model	DT-V24G1Z
Viewable Screen size class (diag.)	24-inch
Panel type	S-IPS
Panel surface	Non glare
Backlight	CCFL
Aspect ratio	16:10
Viewing angle (H/V)	178° / 178°
Pixels	1920 x 1200
Brightness / Contrast	400cd/m², 1,000:1
Portrait mode	–
Features	
Waveform monitor	•
Vectorscope	•
Closed captioning	Analog/Digital ITU 608/708
1:1 Monitoring mode	•
On screen audio metering	Digital (up to 12 ch)
On screen time code	•
IMD (in monitor display)	–
Input / Output signals	
SD/HDSDI inputs	X2 in, 1 switched out w/embedded audio/TC
Dual link / 3G	•
DVI / HDMI input	DVI
Component input / output	Yes (Y, Pb, Pr)
Composite video in / out	X2
Tally lamp	•
Audio speaker	•
Analog audio input	L/R (X2)
Analog audio monitor / output	L/R (X1)
Remote control	MAKE/Trigger RS-485 (I/O) RS-232C
General	
Power requirement	AC 120/220V, 50-60Hz
Rated current	1.15A (AC120V)
Carry handle	–
Desktop stand	•
Optional accessories	RAK2024LCD (Rack mount kit)
External monitor calibration software	•
Suggested List Price	$4,195

DT-V24G1Z SPECIFICATIONS		
Type		Multi format LCD monitor
Screen Size		Type 24 wide format
Aspect Ratio		16:10
LCD Panel		24" wide,active matrix TFT
Effective Screen Size (W x H)		518.4 x 324 mm (20-1/2" x 12-7/8")
Pixels		1920 x 1200
Display Colors		16.77 million
Viewing Angle	Horizontal	178°
	Vertical	178°
Brightness		400 cd/m2
Contrast Ratio		1000: 1
Response Time (G to G)		5 ms (TYP)
H/V Frequency (PC signals)	Horizontal	31.469 kHz to 75.000 kHz
	Vertical	48 Hz - 65 Hz
		Depending on the signal within the range of these frequencies, some signals may not be displayable in which case, "Out of range " is shown.
Applicable Standard		3G SDI (Ready) : SMPTE424M/SMPTE425M
		DUAL LINK HD SDI: SMPTE372M
		HD SDI: BTA S-004C, SMPTE292M
		SD SDI: ITU-R BT.656: 525/625, SMPTE259M: 525
		EMBEDDED AUDIO: SMPTE299M, SMPTE272M
Audio Output		Internal speaker: 1.0 W + 1.0 W
Operating Conditions	Operating temperature	5°C to 35°C (41°F to 95°F)
	Operating humidity	20% to 80% (non condensing)
	Storage temperature	-20°C to 60°C
Power Requirements		AC 120/220-240 V, 50/60 Hz
Rated Current		1.15 A (AC 120 V) / 0.67 A (AC 220 – 240 V)
Dimensions (WxHxD)	With desktop stand	564 x 448.6 x 243 mm (22-1/4" x 17-3/4" x 9-5/8")
excluding protrusions)	Without stand	564 x 408 x 99 mm (22-1/4" x 16-1/8" x 4")
Weight	Including stand	11.6 kg (25.5 lbs.)
	Excluding stand	8.7 kg (19.1 lbs.)
Provided Accessories		AC power cord, power cord holder x 1, screw x 2 (for power cord holder)

Studio Monitor Sony LMD-A240 (24” LCD 3G HDSDI Monitor)

Der WUXGA-Monitor (1.920 x 1.200) der LMD-A-Serie im leichten und schlanken Design

Der Monitor LMD-A240 verfügt über die Standardeingänge 3G/HD/SD-SDI (2 x), HDMI (HDCP) (1 x) und Composite (1 x).

Bildleistung

Panel	a-Si TFT Active Matrix LCD
Bildschirmgröße (Diagonale)	611,3 mm 24 inches
Effektive Bildgröße (H x V)	518.4 x 324.0 mm 20 1/2 x 12 7/8 inches
Auflösung (H x V)	1920 x 1200 Pixel (WUXGA)
Seitenverhältnis	16:10
Pixeleffizienz	99,99%
Farben	Ca.1.073 Millionen Farben
Normaler Scan	0-%-Scan

Eingang

Composite-Eingang	BNC (1 x), 1 Vs-s ±3 dB, negative Sync.
SDI-Eingang	BNC (2 x)
HDMI-Eingang	HDMI (1) (HDCP-Unterstützung)
Audioeingang	Stereo-Klinkenbuchse (1 x), -5 dBu, 47 kΩ oder höher
Parallele Fernbedienung	Modularer Anschluss RJ-45, 8-polig (1 x) (zuweisbar)
Serielle Fernbedienung (LAN)	RJ-45 (1 x) (Ethernet, 10BASE-T/100BASE-TX)
DC Eingang	XLR-Stecker (1 x), 4-polig, 12 bis 17 V DC (Ausgangs-Impedanz max. 0,05 Ω)

Ausgang

Composite-Ausgang	BNC (1 x), Loop-Through, mit automatischem 75-Ω-Abschluss
SDI-Ausgang	BNC (2 x), Amplitude des Ausgangssignals: 800 m Vs-s ±10 %, Ausgangs-Impedanz: 75 Ω, asymmetrisch
Audio-Monitorausgang	Stereo-Klinkenbuchse (1 x)
Lautsprecherausgang (integrierter Lautsprecher)	1,0 W (mono)
Kopfhörerausgang	Stereo-Klinkenbuchse (1 x)